SAVE THESE INSTRUCTIONS

DEALER/INSTALLER: GIVE TO HOMEOWNER

Ocean Blue

Above Ground A-Frame Pool Ladder

Assembly and Installation Manual

Part no. 400200

Not for Use with Soft Sided Pools

Ocean BLUE WATER PRODUCTS

Ocean Blue A-Frame Ladder

for above ground pools

ASSEMBLY INSTRUCTIONS - PLEASE READ BEFORE ATTEMPTING ASSEMBLY

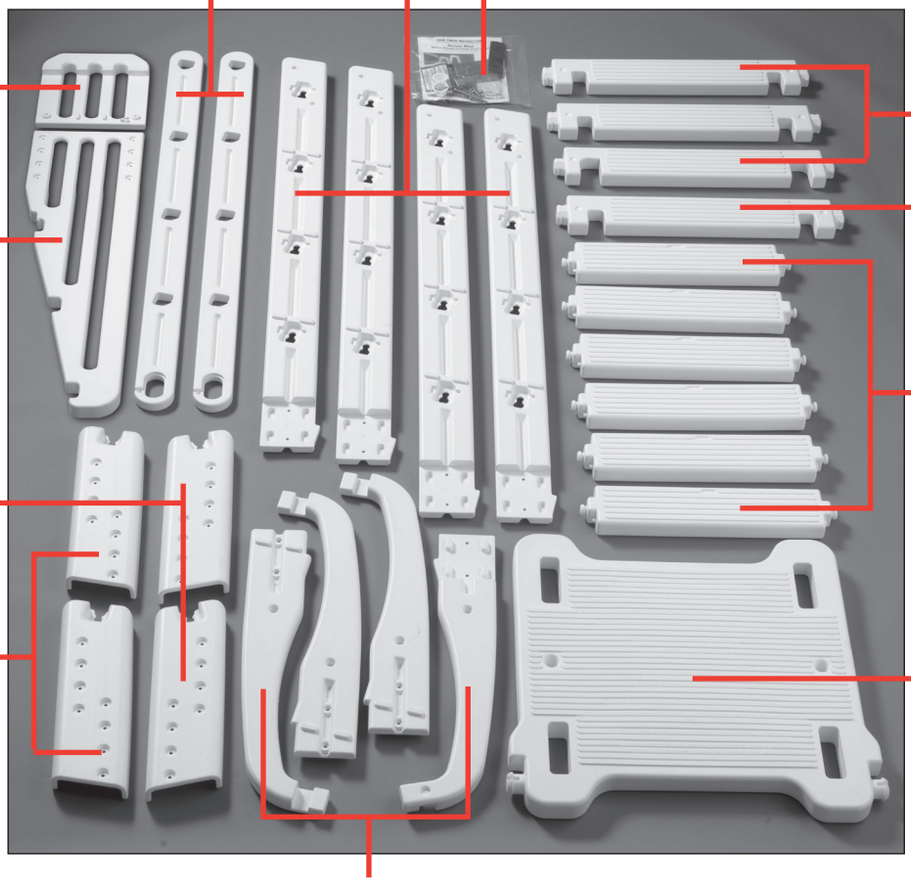

Tools Needed for Assembly

- Rubber Mallet
- Cordless Drill w/Phillips Driver
- 5/16” Drill Bit
- Phillips Screwdriver

Parts List

- 4 - Side Rails
- 4 - Handrails
- 1 - Platform
- 2 - Right Adjustable Rail Boot
- 2 - Left Adjustable Rail Boot
- 2 - Swing-up Rails
- 3 - Swing-up Treads
- 1 - Bottom Swing-Up Tread
- 6 - Fixed Ladder Treads
- 1 - Anti-Swim Barrier
- 1 - Anti-Swim Barrier Extension
- 1 - Fixed Ladder Tread
- 1 - Hardware Safety Pack

Hardware Bag

- 20 - 1/4-20 hex nuts
- 2 - 1/4-20 x 1.25” Philips pan head screws
- 8 - 1/4-20 x 1.5” Philips pan head screws
- 8 - 1/4-20 x .625” Philips pan head screws
- 4 - 1/4-#10 x .75” Philips self-tapping screws
- 2 - 1/4 - 20 x 3-1/2” Bolts
- 2 - 1/4” Flat Washers
- 1 - Strip of Foam Pads (4 pads)
- Instructions
- Warning Labels
- Padlock

Step #1

Tools Needed: Rubber Mallet

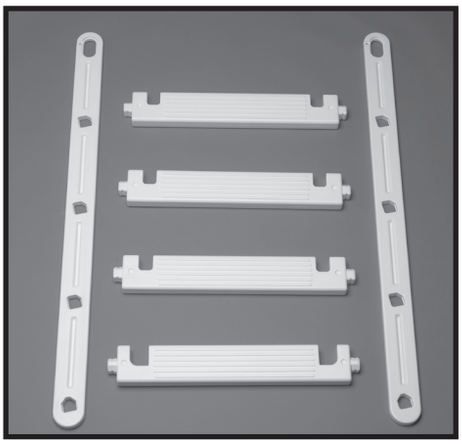

#1: Lay out the Swing-up Rails and Swing-up Treads as shown.
NOTE: *The bottom Swing-up Tread has a "house shaped" tab and is positioned at the bottom of the Swing-up Rail.*

#2: Using a rubber mallet, tap the Swing-up Treads into place.

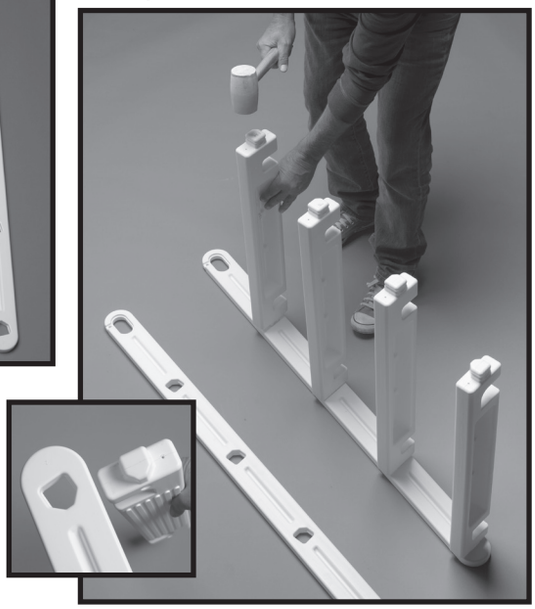

#3: Place the remaining Swing-up Rail over the tabs of the Swing-up Treads and tap into place using the rubber mallet. Set this assembly aside.

Step #2

Tools Needed: Rubber Mallet, cordless drill with Phillips bit.

Adjustable Rail Boots are not required if the outside height of your pool (measured from the ground to the top of the pool ledge) is 48" or less. If this measurement is more than 48" rail boots will be required. If the outside measurement of your pool is 48" or less, skip to step 3.

#1: Slip one of the Adjustable Rail Boots over the end of a Side Rail. It will need to be all the way on if the outside dimension of your pool is 50" or backed off to the marked number that corresponds with the height of your pool.

#2: Using two 1/4-20 x 1 1/2" long bolts and two 1/4-20 hex nuts, fasten the Adjustable Rail Boot to the Side Rail. Repeat for remaining three Side Rails.

Step #3

Tools Needed: Rubber Mallet, cordless drill with Phillips bit.

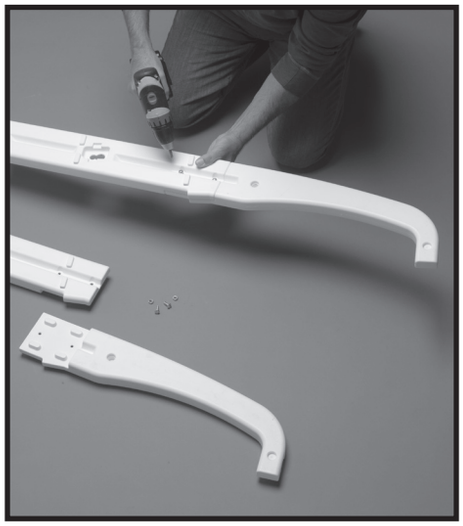

#1: Overlap the flat end of the Handrail onto the top of the Side Rail. Using two 1/4 - 20 x 5/8" bolts and two 1/4- 20 hex nuts, attach the Handrail to the Side Rail. Repeat for the remaining three Side Rails.

Step #3 continued

Step #3 continued

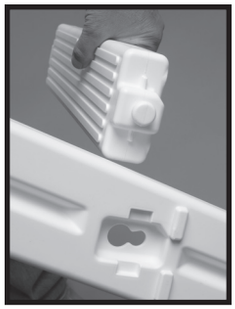

#2: Lay one of the Side Rail assemblies on a flat surface. Matching the tabs in the Fixed Ladder Treads to the notches in the Side Rail assembly, use the rubber mallet to tap the treads into place.

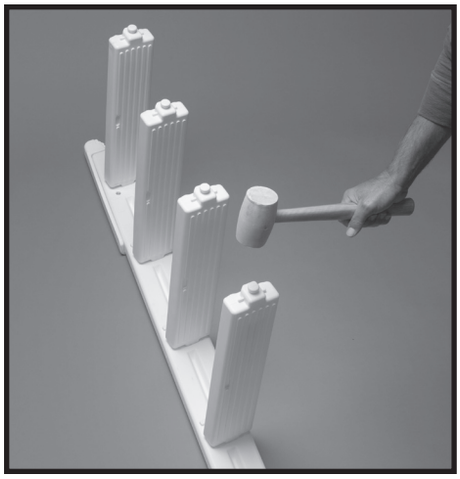

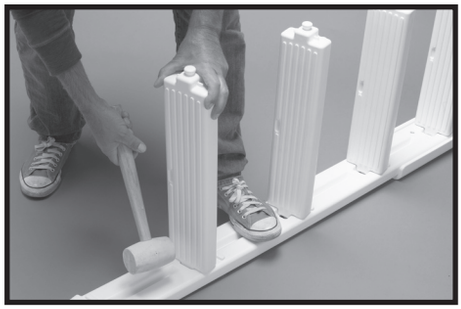

#3: Placing your foot on the Side Rail to hold it steady, use the rubber mallet to tap down the Fixed Ladder Treads until they are firmly seated in the Side Rail.

#4: Place the opposite Side Rail assembly on top of the Fixed Ladder Treads so that the notches and tabs align and tap it into place. Placing your foot on the Side Rail to hold it steady, use the rubber mallet to tap down the Fixed Ladder Treads until they are firmly seated into both Side Rails.

#5: With ladder assembly on edge, position one of the remaining Fixed Ladder Treads so that the tabs align with the notches at the bottom of the Side Rail assemblies and tap in with the rubber mallet until the tread is properly seated.

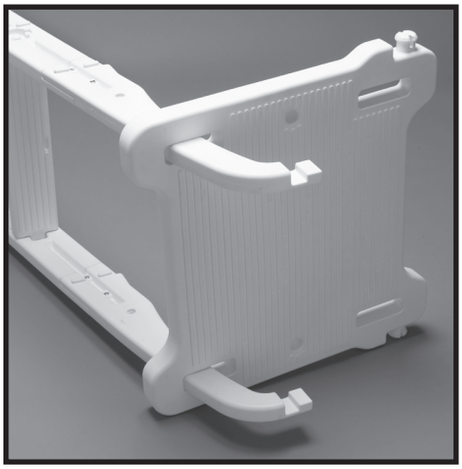

#6: Using the openings opposite the tabbed end, slide the Platform over the two Handrails.

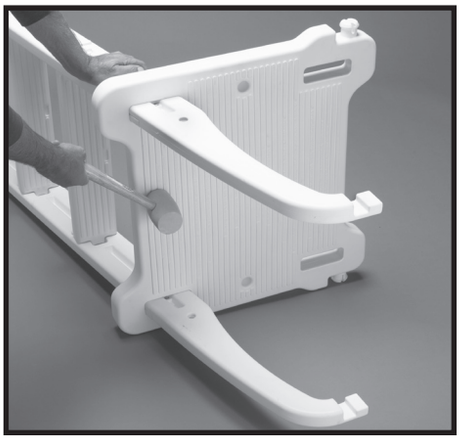

#7: Using the rubber mallet, tap the Platform down until seated on the lugs on the Side Rails.

Step #4

Tools Needed: Rubber Mallet, cordless drill with Phillips bit.

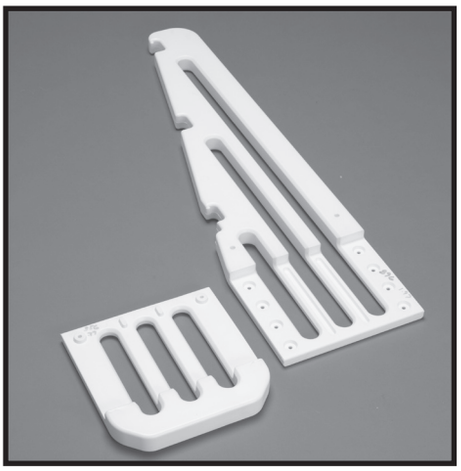

#1: Lay the Anti-Swim Barrier and the Anti-Swim Barrier Extension on a flat surface.

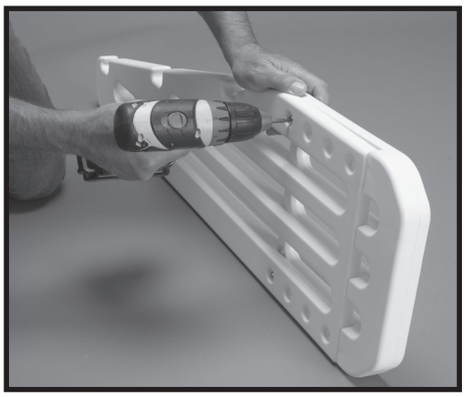

#2: Position the Anti-Swim Barrier Extension over the Anti-Swim Barrier so that the length of the Barrier matches the length from the top tread to the bottom tread of the ladder. Attach with two 1/4 - 20 x 1 1/4" bolts and two 1/4- 20 hex nuts.

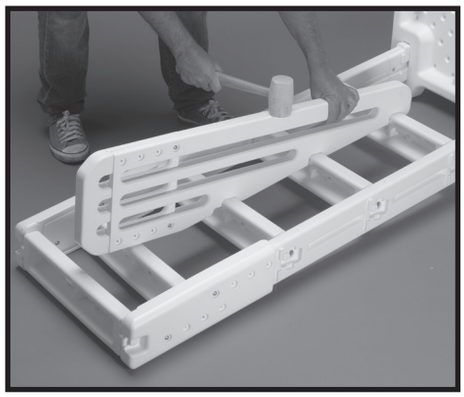

#3: Using the rubber mallet, tap the Anti-Swim Barrier into place.

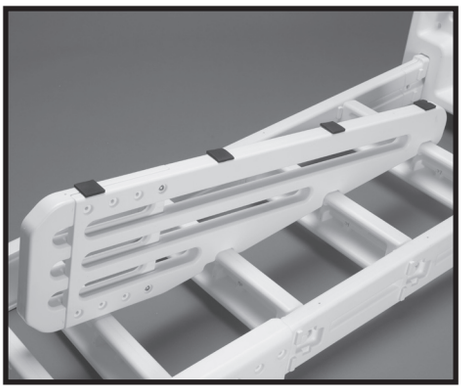

#4: Evenly space the foam adhesive pads to the Barrier.

Step #5

Tools Needed: Rubber Mallet, cordless drill with Phillips bit.

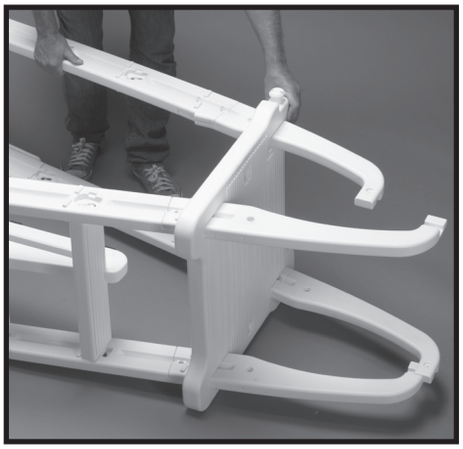

#1: Flip entire ladder assembly onto its side. Slide the two remaining Side Rail assemblies through the two openings on the tabbed end of the Platform. Using the rubber mallet, tap down on the Platform until it is seated against the lugs on the Side Rails. IT MAY REQUIRE SEVERAL HARD BLOWS WITH A RUBBER MALLET TO SEAT THE PLATFORM ALL THE WAY DOWN ONTO LUGS.

Step #5 continued

Step #5 continued

#2: Using two #10 x 3/4" self-tapping screws, connect the Handrails together by using one screw on the outside and one screw on the inside. Repeat for the remaining handrail.

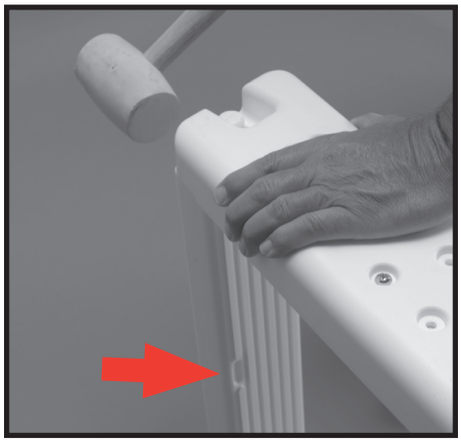

#3: Position the remaining Fixed Ladder Tread so that the tabs align with the notches at the bottom of the Side Rail assemblies and tap in with the rubber mallet until the tread is properly seated. NOTE: The small groove should face the inside of the ladder.

#4: Stand the ladder upright. Attach the Swing Ladder assembly by flexing the oval openings over the two round tabs on the Platform.

#5: Using the rubber mallet tap down to secure.

Step #6

Placing A-Frame Ladder in Pool

CHOOSE A LOCATION THAT IS LEVEL AND IN FULL VIEW.
POOL MUST HAVE COMPETENT ADULT SUPERVISION AT ALL TIMES WHEN IN USE.

Tools Needed: Cordless drill with Phillips bit.

#1: Carefully lift the ladder over the pool wall making sure the Swing Ladder is on the outside of the pool. Be careful not to damage liner or pool wall. The platform must be level should rest on the pool top seat and the bottom tread should rest firmly on the pool bottom. Depending on the outside height of the swimming pool ledge, rail boots may need to be readjusted at this time. ***Use of a ladder pad is highly recommended to protect pool liner.***

#2: Tip the ladder sideways to allow the treads to fill the water. This will prevent floating. Allow ladder to fill with water until it settles on the bottom of the pool. Small holes in the side rails will let the water in. this may take a few minutes.

#3: Check to make sure the hole locations in the platform are clear of pool wall and supports. Drill two 5/16" holes through the Platform and pool ledge. Fasten the ladder platform to the pool ledge using two ¼-20 x 2-1/4" bolts, ¼-20 hex nuts. **You MUST secure the ladder to the pool top rail for strength and stability.**

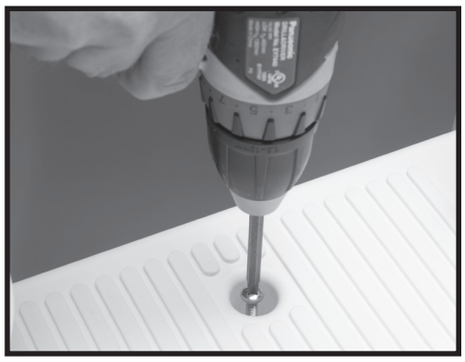

#4: When the pool is not in use, rotate the Swing Ladder to the up position and secure it in place with the padlock as shown.

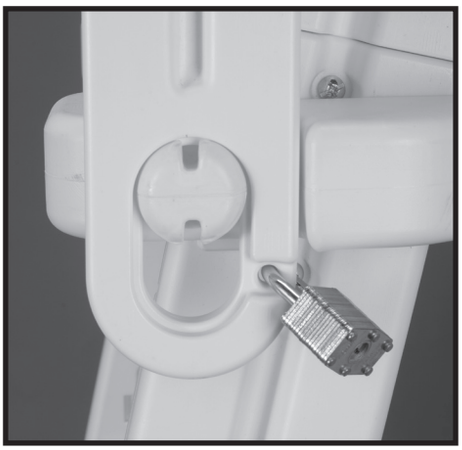

OUTSIDE TREADS MUST BE IN THE UP POSITION AND LOCKED AT ALL TIMES WHEN POOL IS NOT IN USE.

Safety Rules

- Locate ladder on a solid base.
- One person on the ladder at a time.
- Ladder MUST be installed per manufacturer's instructions.
- Secure ladder to top rail of pool for greater stability and safety as outlined in this assembly manual. ***Use of a ladder pad is highly recommended to protect pool liner.***
- **DANGER:** No Jumping or Diving from ladder.
- Face ladder when entering and leaving pool.
- To prevent entrapment or drowning — **DO NOT** swim through, behind or around ladder.
- Ladder to be used as a swimming pool ladder only.
- Weight limit - 300 lbs. maximum
- **Warning:** Exceeding the maximum weight restriction may cause the ladder to fail.
- When ladder is not in use, swing up outside ladder section and lock using padlock. Ladder must be locked at all times when not in use or when there is no qualified adult supervision.
- Consult your local Building Department before installation of your pool and equipment.
- **DANGER:** Use a cordless drill for assembly and installation. **NEVER** use an electric drill in or around the pool.

IMPORTANT For Your Safety

- Check the contents of the carton with the parts list for this ladder.
- **DO NOT** attempt to assemble or install the ladder if there are **ANY** shortages of parts or hardware.
- For proper assembly and installation follow all instructions in the sequence shown.
- Before using the product, after assembly and installation, go over the instructions and procedures again to make sure nothing has been overlooked.
- Be sure and safe. The manufacturer IS NOT responsible for improper assembly, installation and use.

Not for Use with Soft Sided Pools

MAINTENANCE:
To keep your new ladder working properly, just hose off once a week with clean water. Check the Swing-up Ladder for proper operation. Check padlock for proper operation, lubricate if necessary.

WINTERIZING:
Unfasten the ladder from pool ledge and remove from the water. Lay the ladder on its side to drain. It will take several minutes for the water to drain out of the ladder rails. A small amount of water left in ladder will not cause any damage. Store in a safe place out of the elements.

OCEAN BLUE WATER PRODUCTS WARRANTY

Ocean Blue Water Products warrants their swimming pool ladders to be free from defects in workmanship for one year from date of purchase.

DO NOT RETURN DEFECTIVE PART TO DEALER

The defective part should be returned, postpaid, to:

Ocean Blue Water Products
7447A S Central Ave
Bedford Park IL 60638

Enclose proof of purchase (receipts, etc.) showing date purchased, your name, address, and daytime phone number. You will be notified of cost to replace part. *This warranty gives you specific legal rights, and you may also have other rights which may vary from state to state.*

Ocean BLUE WATER PRODUCTS

Made in U.S.A • Printed in U.S.A.